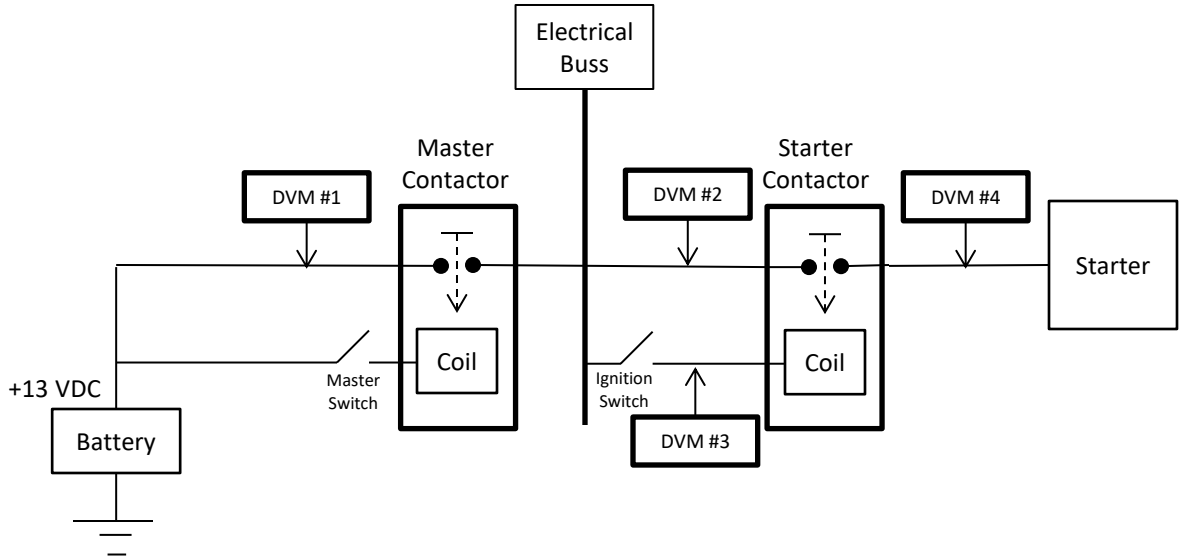
Electrical Buss
Master Contactor
Starter Contactor
DVM #1
DVM #2
DVM #4
Starter
Coil
Coil
+13 VDC
Master Switch
Ignition Switch
Battery
DVM #3